Micro-Transmit Active Point Source Tracking for Eliminating RF Tissue Heating

R. P. Mallozzi[1], E. Fiveland[1], R. A. Guhde[1], C. L. Dumoulin[1]

[1]MRI Laboratory, GE Global Research, Niskayuna, NY, United States

Introduction

Interventional MRI applications currently face important safety concerns of tissue heating associated with conducting structures in radio-frequency (RF) fields. Long, wire-like structures, such as catheters, guidewires, and pacemaker leads are particularly susceptible to conditions that lead to tissue heating [1-3]. These structures can support current and voltage standing waves along their length, excited by RF transmit coils. Under certain near-resonant conditions, currents and voltages can be become large enough to create dangerous levels of heating in nearby tissues.

We have developed a method to track devices in an MR scanner that produces no measurable heating effects, based on active MR point source tracking[4]. MR active point source tracking uses small pickup coils (tracking coils) built onto the device to be tracked. These coils are connected to preamplifiers with coaxial leads running along the length of the device. In conventional active point source tracking, a body or surface coil is used as a transmit coil, and the tracking coils are used to receive the signal from nearby spins. The coils are sensitive to only a small region around them, enabling their location to be determined easily.

Using body or surface coils for transmit function creates RF fields over large enough volumes in the scanner to excite currents on conducting structures that can present a danger. To avoid this situation, we have developed a system in which the tracking coils are used for both transmitting and receiving the RF signal (micro-transmit/receive). RF fields exist only very close to the tracking coils, so that there is little or no excitation of currents along the length of the devices or coaxial leads, or indeed along other conducting structures in the body. The result is that no measurable heating occurs while the device is being tracked.

Materials and Methods

Figure 1 shows a diagram of the microT/R circuit. Signals from the RF exciter are routed either to conventional imaging coils or to the tracking coils, under control of the user interface to the custom-built tracking software. A blanking control circuit sends a signal that enables or disables blocking circuits and switches RF exciter signal to either the tracking coils or the conventional volume (body or surface) coils. A similar switch on the receive side enables receive to be performed with either tracking coils or volume coils.

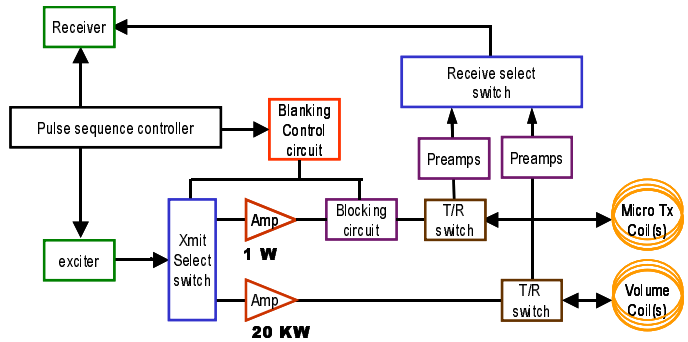

Figure 1: Diagram of micro T/R circuit

Heating measurements were performed in copper sulfate and saline solution with concentration 10 mM $CuSO_4$ and 150 mM NaCl. The saline bath was a long cylindrical plastic tube, about 1 meter in length and with diameter four inches.

A catheter of length 90 cm with three tracking coils built onto it was placed 20 cm into a saline bath, along the central axis of the tube. The tracking coils were connected with coaxial cables to the preamplifier. Temperature measurements were made with a fluoroptic temperature sensor (Luxtron) placed approximately 1 mm from the tip of one of the tracking coils, in the saline solution. The saline bath and wire were placed 17 cm from the center of the patient bore. Heating measurements were made by running the tracking pulse sequence until the measured temperature stabilized, usually about 30-40 seconds per data point. The length of coaxial cable was increased in 10-20 cm increments and the measurement repeated. The variation of the length of wire ensured that near-resonant conditions were sampled. The total length of coax added was greater than 2.5 meters, so that at least one half wavelength had been sampled.

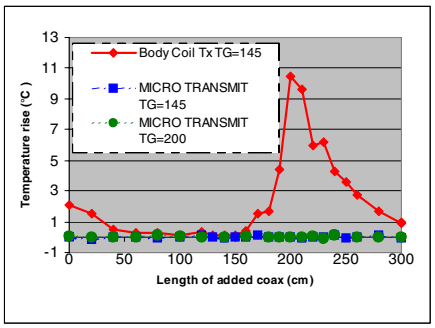

Figure 2: Temperature increase versus wire length for three configurations: body coil transmit (red), micro transmit with a typical TG amplifier setting (blue), and micro transmit with the maximum possible amplifier settings (green).

Results and Discussion

Figure 2 shows temperature increase in Celsius for three modes of tracking: one body coil transmit and two 'micro transmit' modes, in which the RF transmit function is performed by the tracking coil. In each case, the MR pulse sequence is a gradient-echo-based MR tracking sequence. The tracking rate was 16 updates per second. In the first experiment (red trace), the body coil was used for transmit and the tracking coil was used for receive. The maximum temperature increase was 11 degrees Celsius. In the second and third experiments, the tracking coils were used for both transmit and receive. In the first microtransmit case, the transmit amplifier setting was also set to TG=145, a level that is representative of where tracking would normally be performed. There was no measurable heating effect. In the third experiment, the amplifier setting TG was set to its maximum level of 200, so that the maximum power that could be put into the tracking coils with this set of electronics was used. This level corresponds to an increase of 5.5 dB, or a factor of 3.5 in the power sent to the transmit coil. There was no measurable heating in this configuration either, as seen on figure 2.

These experiments demonstrate that devices can be tracked without danger of heating by using the small tracking coils to transmit the RF fields. The small volume of excitation prevents the excitation of standing wave currents on the conducting structures of the device and coaxial leads. This solution allows devices to be tracked against pre-acquired images, but does not solve the general problem of tissue heating, as normal imaging function could still lead to dangerous heating levels because of the use of body, head, or surface coils to transmit the RF pulses. Nonetheless, this method can track a conducting device safely in an MR scanner without danger of tissue heating and is a step towards safe interventional procedures.

References

1) M.K. Konings, L.W. Bartels, H.F.M. Smits, and C.J.G. Bakker, JMRI 12: 79-85 (2000)
2) C.Y. Liu, K. Farahani, D.S.K. Lu, G.D Duckwiler, and A. Oppelt, JMRI 12:75-78 (2000)
3) C.J. Yeung, R.C. Susil, and E. Atalar, MRM 48: 1096-98 (2002)
4) Dumoulin CL, Souza SP, Darrow R.D Magn Reson Med 9:411-15 (1993).